Philip

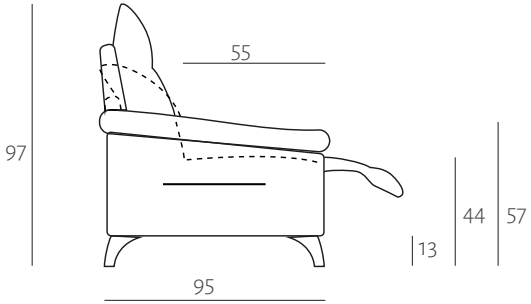

vale furnishers





Specifications

- Contemporary modular sofa range
- Electric reclining action
- Contrast or matching trim detail on back cushion and arm side
- Designed and made in Italy
- Battery pack available, £249 per seat
- 2 year warranty

Please note all sizes are approximate

Oct 2023

Group A 104cm Seats

cod. 0176 POLTR. XL — 95 × 150
cod. 0192 POLTRONA XL LAT SX — 95 × 127
cod. 0191 POLTRONA XL LAT DX — 95 × 127
cod. 0193 POLTRONA XL CENT — 95 × 104
cod. 0718 POL XL PENISOLA SX — 95 × 145
cod. 0717 POL XL PENISOLA DX — 95 × 145
cod. 0891 DORMOSA XL LAT SX — 160 × 127
cod. 0890 DORMOSA XL LAT DX — 160 × 127

Group B - 84cm Seats

cod. 0430 DIVANO 3 POSTI GRANDE — 95 × 214
cod. 0432 3 P GRANDE SX — 95 × 191
cod. 0431 3 POSTI GRANDE DX — 95 × 191
cod. 0109 POLTRONA GRANDE SX — 95 × 107
cod. 0108 POLTRONA GRANDE DX — 95 × 107
cod. 0104 POLTR. GRANDE CENTRALE — 95 × 84
cod. 0738 POL GRANDE PEN SX — 95 × 125
cod. 0737 POL GRANDE PEN DX — 95 × 125
cod. 0789 DORMOSA GRANDE SX — 160 × 107
cod. 0788 DORMOSA GRANDE DX — 160 × 107

Group C - 75cm seats

cod. 0305 DIVANO 3P 2C — 95 × 196
cod. 0345 3 POSTI 2 CUSCINI SX — 95 × 173
cod. 0344 3 POSTI 2 CUSCINI DX — 95 × 173
cod. 0117 POLTRONA SX 2 CUSCINI — 95 × 98
cod. 0116 POLTRONA DX 2 CUSCINI — 95 × 98
cod. 0115 POLTRONA CENTRALE 2C — 95 × 75
cod. 0716 POLTRONA 2C PEN. SX — 95 × 116
cod. 0715 POLTRONA 2C PEN DX — 95 × 116
cod. 0697 DORM. 2C LAT. SX — 160 × 98
cod. 0696 DORM. 2C LAT. DX — 160 × 98

Group D - 67cm seats

cod. 0210 DIVANO 2 P MAXI — 95 × 180
cod. 0212 2 POSTI MAXI SX — 95 × 157
cod. 0211 2 POSTI MAXI DX — 95 × 157
cod. 0112 POLTRONA MAXI SX — 95 × 90
cod. 0111 POLTRONA MAXI DX — 95 × 90
cod. 0113 POLTRONA CENTRALE MAXI — 95 × 67
cod. 0714 POLTRONA MAXI PEN. SX — 95 × 108
cod. 0713 POLTRONA MAXI PEN. DX — 95 × 108
cod. 0705 DORMOSA MAXI LAT. SX — 160 × 90
cod. 0704 DORMOSA MAXI LAT. DX — 160 × 90

Group E - 58cm seats

cod. 0200 DIVANO 2 POSTI — 95 × 162
cod. 0202 DIVANO 2 POSTI LAT. SX — 95 × 139
cod. 0201 DIVANO 2 POSTI LAT. DX — 95 × 139
cod. 0203 2 P CENTRALE — 95 × 116
cod. 0100 POLTRONA — 95 × 104
cod. 0102 POLTRONA LAT. SX — 95 × 81
cod. 0101 POLTRONA LAT. DX — 95 × 81
cod. 0103 POLTRONA CENTRALE — 95 × 58
cod. 0712 POLTRONA PEN. SX — 95 × 99
cod. 0711 POLTRONA PEN. DX — 95 × 99
cod. 0701 DORM. LAT. SX — 160 × 81
cod. 0700 DORM. LAT. DX — 160 × 81

Group F Can be combined with all sizes

cod. 0604 ANGOLO QUADRO — 103 × 103
cod. 0602 ANGOLO — 124 × 124
cod. 0802 POUF RETTANGOLARE — 80 × 65
cod. 0883 ANG. SAGOMATO POLTR. PEN. SX — 115 × 203
cod. 0882 ANG. SAGOMATO POLTR. PEN. DX — 115 × 203
cod. 0773 ANG. POL. PENISOLA SX — 103 × 211
cod. 0772 ANG. POL. PENISOLA DX — 103 × 211

Group A 104cm Seats

cod. 1147 POLTR. XL RLX EL. — 95 × 150
cod. 1137 POLTR. XL LAT. SX- RLX — 95 × 127
cod. 1136 POLTR. XL LAT. DX - RLX — 95 × 127
cod. 1138 POLTR. XL CENTRALE - RLX — 95 × 104

Group B - 84cm Seats

cod. 1440 DIV. 3P GRANDE - 2 RLX EL. — 95 × 214
cod. 1445 3P GRANDE - 1 RLX EL. SX — 95 × 214
cod. 1444 3P GRANDE - 1 RLX EL. DX — 95 × 214
cod. 1442 DIV. 3P GRANDE 1RLX SX — 95 × 191
cod. 1441 DIV. 3P GRANDE 1RLX DX — 95 × 191
cod. 1448 3P GRANDE 2 RLX SX — 95 × 191
cod. 1447 3P GRANDE 2 RLX DX — 95 × 191
cod. 1135 POLT. GRANDE RLX SX — 95 × 107
cod. 1134 POLT. GRANDE RLX DX — 95 × 107
cod. 1433 POLTR. GRANDE RLX CENTRALE — 95 × 84

Group C - 75cm seats

cod. 1342 DIV. 3P 2C - 2 RLX EL. — 95 × 196
cod. 1341 DIV. 3P 2C - 1 RLX EL. SX — 95 × 196
cod. 1340 DIV. 3P 2C - 1 RLX EL. DX — 95 × 196
cod. 1339 DIV. 3P 2C SX - 1 RLX — 95 × 173
cod. 1338 DIV. 3P 2C DX - 1 RLX — 95 × 173
cod. 1378 DIV. 3P 2C SX - 2 RLX — 95 × 173
cod. 1377 DIV. 3P 2C DX - 2 RLX — 95 × 173
cod. 1143 POL. 2C SX RLX — 95 × 98
cod. 1142 POL. 2C DX RLX — 95 × 98
cod. 1162 POLTR. CENTR 2C - RLX 2MOT — 95 × 75

Group D - 67cm seats

cod. 1230 DIV. 2P MAXI - 2 RLX EL. — 95 × 180
cod. 1216 2P MAXI - 1 RLX SX — 95 × 180
cod. 1215 2P MAXI - 1 RLX EL. DX — 95 × 180
cod. 1232 2 P MAXI SX - 1 RLX — 95 × 157
cod. 1231 2 P MAXI DX - 1 RLX — 95 × 157
cod. 1228 2 P MAXI SX - 2 RLX — 95 × 157
cod. 1227 2 P MAXI DX - 2 RLX — 95 × 157
cod. 1125 POL. MAXI SX RLX — 95 × 90
cod. 1124 POL. MAXI DX RLX — 95 × 90
cod. 1128 POLTR. MAXI CENTR - RLX — 95 × 67

Group E - 58cm seats

cod. 1220 DIV. 2 P - 2 RLX EL. — 95 × 162
cod. 1206 DIV. 2 P - 1 RLX EL. SX — 95 × 162
cod. 1205 DIV. 2 P - 1 RLX EL. DX — 95 × 162
cod. 1222 2 P SX - 1RLX — 95 × 139
cod. 1221 2 P DX - 1RLX — 95 × 139
cod. 1225 2 P SX - 2 RLX — 95 × 139
cod. 1224 2 P DX - 2 RLX — 95 × 139
cod. 1224 2 P DX - 2 RLX — 95 × 139
cod. 1120 POLTRONA RLX — 95 × 104
cod. 1122 POLTR. SX - RLX — 95 × 81
cod. 1121 POLTR. DX - RLX — 95 × 81
cod. 1118 POLTRONA CENTRALE RLX — 95 × 58



Button Mechanism for Electric Recliners